SB-100-4

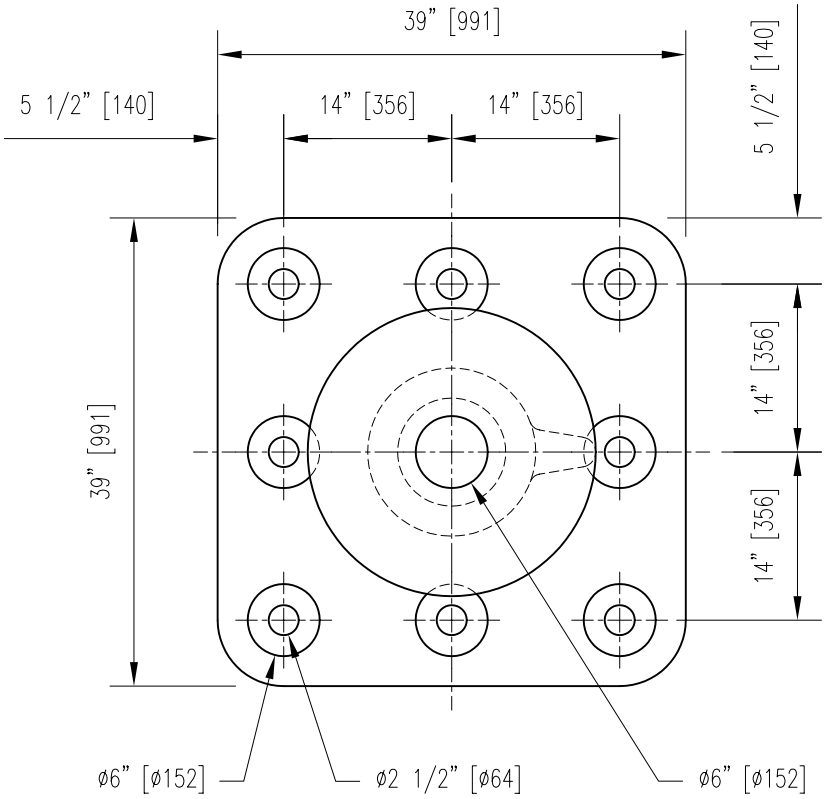

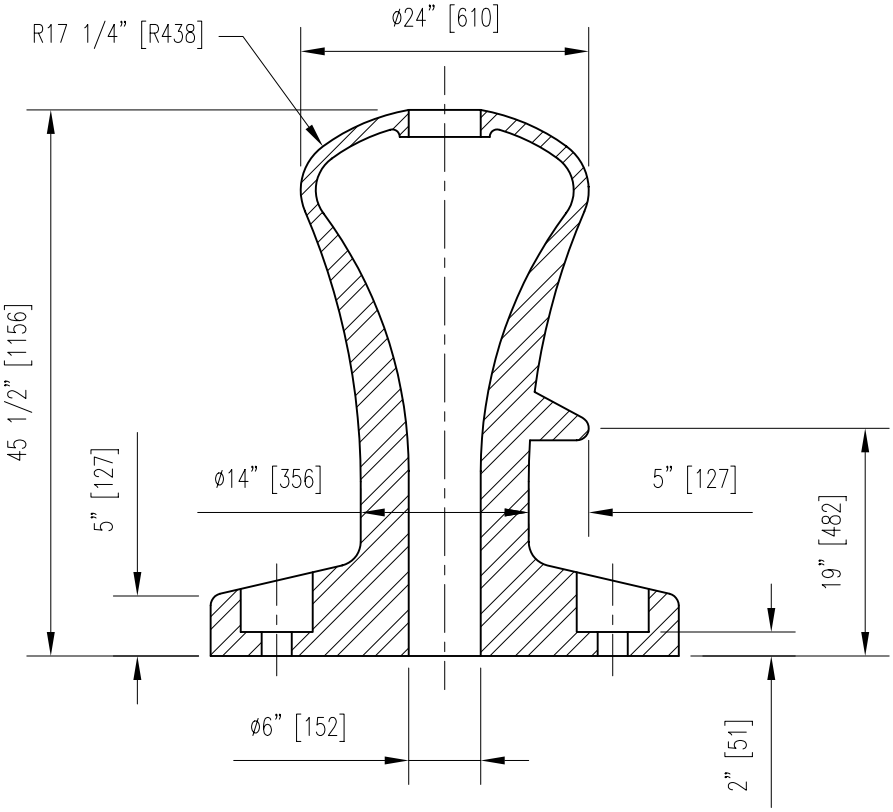

Dimensions subject to change

Maritime International

© Copyright 2002

Ph. 337.837.7160

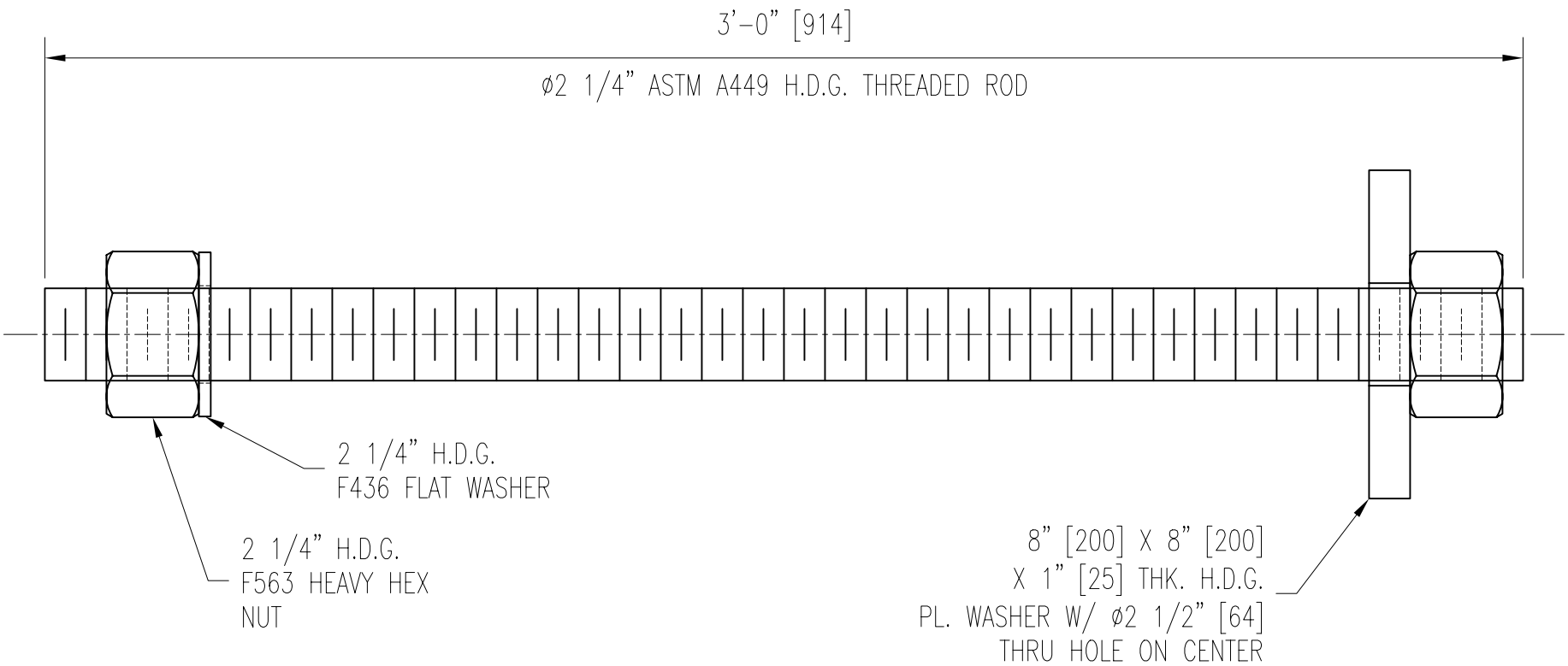

1 ANCHOR DETAIL
SCALE: 3" = 1'

REV. NO.	BY	DESCRIPTION	DATE
0	JEB	INITIAL RELEASE	11/06/02

PROJECT TITLE: BOLLARD ANCHOR ROD

DRAWING TITLE: 2 1/4" X 36" ANCHOR ROD HARDWARE

DWN BY: JEB
CHK BY: JEB
DATE: 11/06/02
SCALE: 3"=1'

APPROVED FOR CONSTRUCTION BY:

RELEASE OF THIS DRAWING VOIDS ALL OTHER REVISIONS, IF ANY, PREVIOUSLY RELEASED.

PROJECT NO:
DRAWING NO:
REV. NO: 0

THIS DRAWING AND THE DESIGN IT REPRESENTS IS THE PROPERTY OF MARITIME INTERNATIONAL. ANY USE OTHER THAN THAT WHICH IS EXPRESSLY AUTHORIZED BY MARITIME INTERNATIONAL IS PROHIBITED. © COPYRIGHT 2002

MARITIME
International Inc